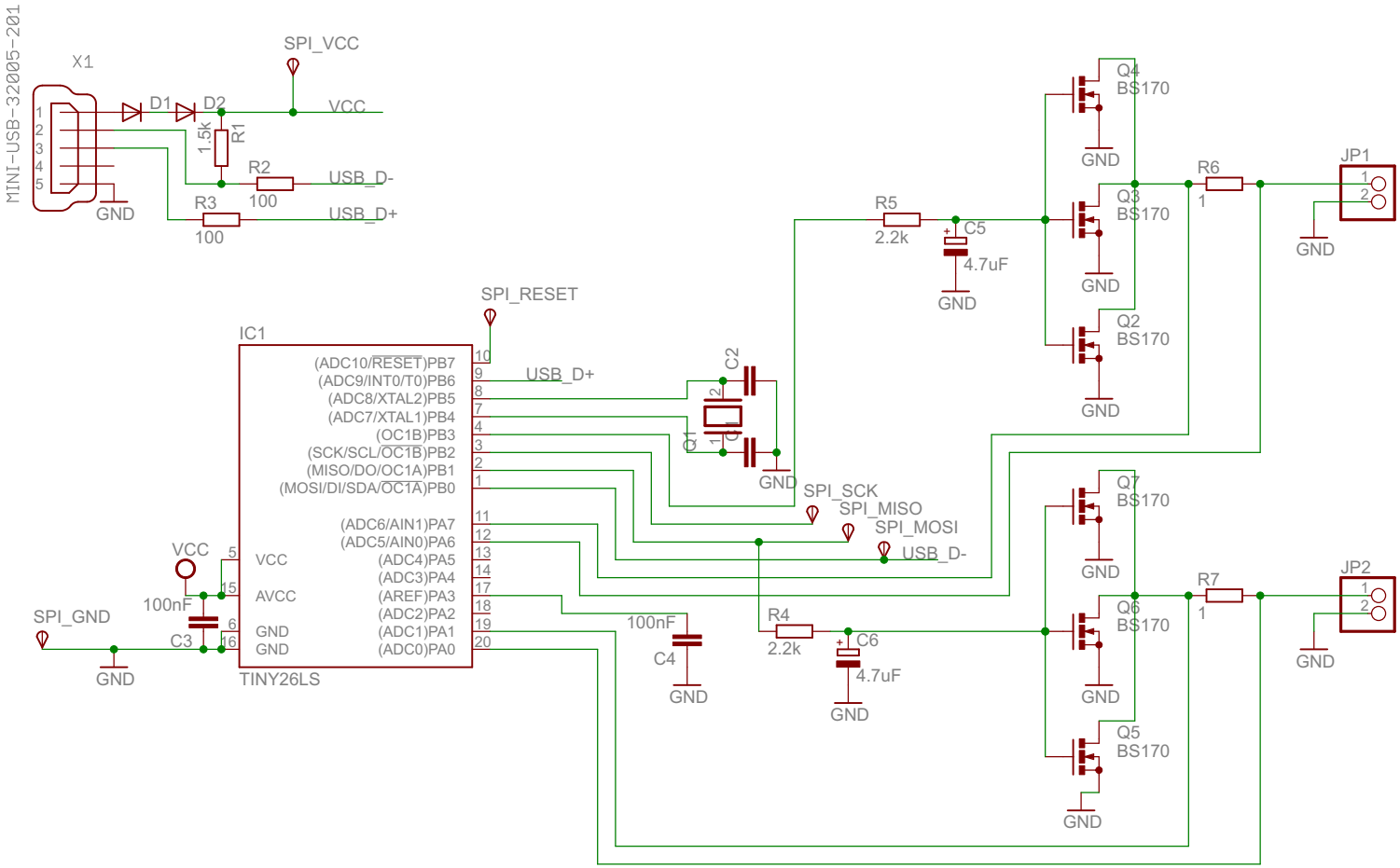
MINI-USB-32005-201
X1
SPI_VCC
D1
D2
VCC
1.5k
R1
R2
100
USB_D-
R3
100
USB_D+
GND
IC1
SPI_RESET
(ADC10/RESET)PB7
(ADC9/INT0/T0)PB6
(ADC8/XTAL2)PB5
(ADC7/XTAL1)PB4
(OC1B)PB3
(SCK/SCL/OC1B)PB2
(MISO/DO/OC1A)PB1
(MOSI/DI/SDA/OC1A)PB0
(ADC6/AIN1)PA7
(ADC5/AIN0)PA6
(ADC4)PA5
(ADC3)PA4
(AREF)PA3
(ADC2)PA2
(ADC1)PA1
(ADC0)PA0
VCC
AVCC
GND
GND
TINY26LS
C2
Q1
C1
SPI_SCK
SPI_MISO
SPI_MOSI
USB_D-
VCC
100nF
C3
SPI_GND
100nF
C4
R4
2.2k
C6
4.7uF
R5
2.2k
C5
4.7uF
Q4
BS170
Q3
BS170
Q2
BS170
Q7
BS170
Q6
BS170
Q5
BS170
R6
1
R7
1
JP1
JP2